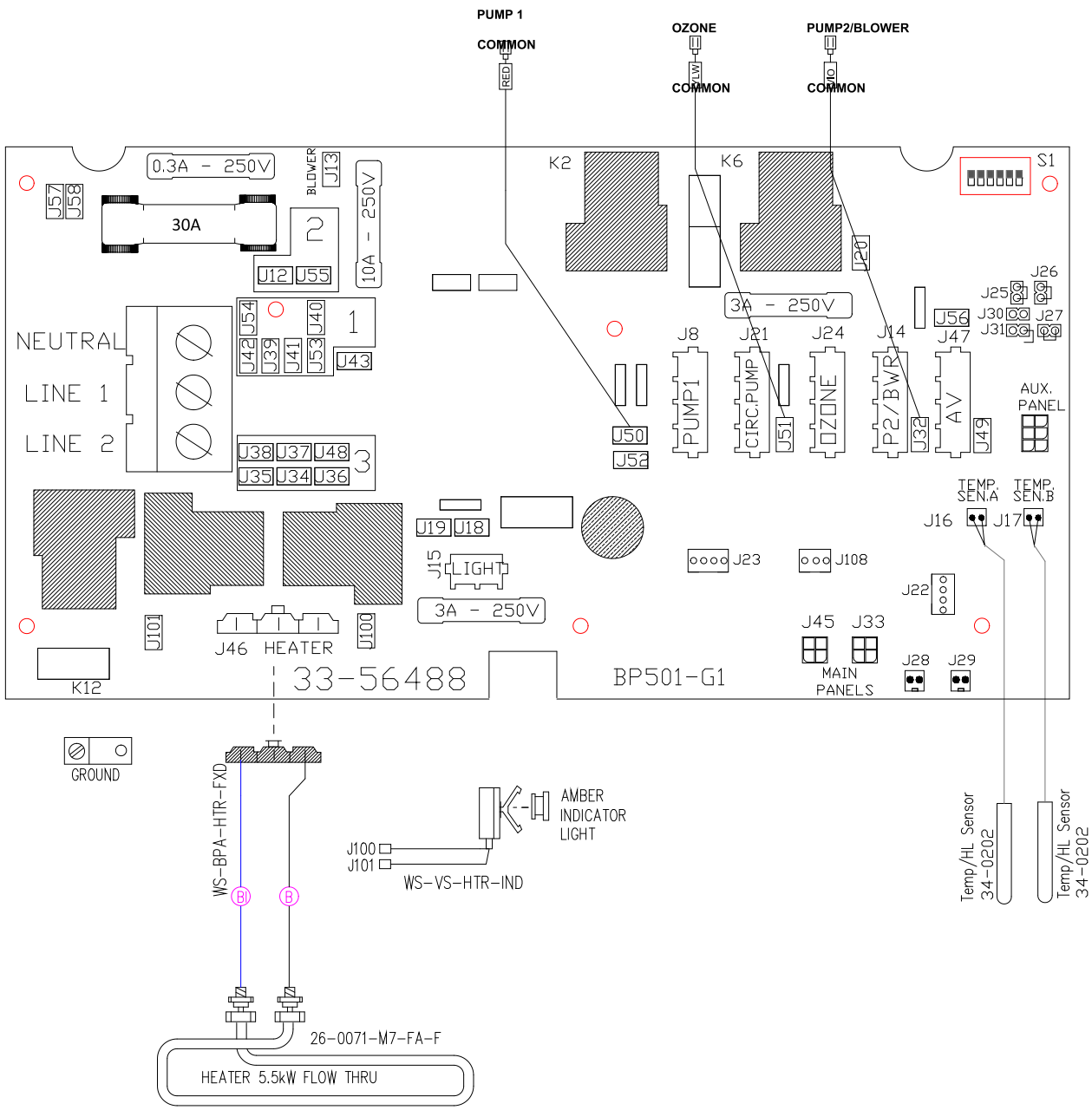

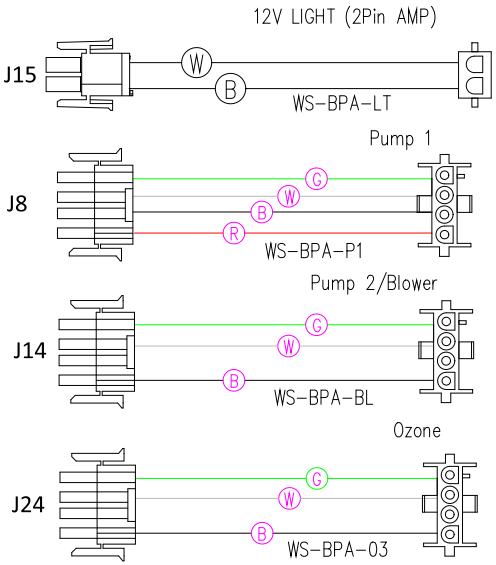

LEGEND
☐ – 1/4" QUICK CONNECT
⊟ – 1/4" QUICK CONNECT PIGGYBACK
⊞ – FORK CONNECTOR
○ – RING CONNECTOR
▭ – SOCKET CONNECTOR
△ – PIN CONNECTOR

HYDRO—QUIP
CORONA, CA (951) 273-7575

Manufacture Notes:

#1 Line 2 and Neutral need to be jumpered for 120V operation.

Drawn	Rev
MO	01
Date 05.18.16	
Diagram No. 9054	

Wire Color Code

B – Black	G – Green
Br – Brown	Bl – Blue
R – Red	V – Violet
O – Orange	W – White
Y – Yellow	Gr – Gray